Mass customization of high performance composites with low investment costs

CHRISTIAN BRECHER; CLEMENS BUSCHHOFF; HENNING JANSSEN; MICHAEL EMONTS
Fraunhofer Institute for Production Technology IPT, Steinbachstr. 17, 52074 Aachen, Germany

Abstract: One of the most important factors for the industry today is the energy-efficient production of lightweight components.
An affordable process that enables the mass customization of high performance composites with low investment costs is the goal. An automated manufacturing approach is developed that allows affordable high performance products made by fiber-reinforced thermoplastic composites. This concept caters to a wide variety of industries with the help of one production technology.
On a technological level it is demonstrated that with the new approach (a mutual consideration of tape placement and thermoforming), superior parts can be produced with less effort than today. On economical level it will demonstrated that this can be achieved with equipment that allows a short return on invest and that improves the competiveness on a long term.
The technology is an automated manufacturing solution that allows flexible volume production of recyclable high performance composite parts with nearly any shape. This is achieved by exploiting the synergy of efficient primary shaping technologies (laser-assisted tape placement) and reshaping (thermoforming).

INTRODUCTION

One of the most important factors for the industry today is the energy-efficient production of lightweight components.
An affordable process that enables the mass customization of high performance composites with low investment costs is the goal. An automated manufacturing approach is developed that allows affordable high performance products made by fiber-reinforced thermoplastic composites. This concept caters to a wide variety of industries with the help of one production technology.

The processing technologies for fiber-reinforced composites are mainly driven by the aerospace industry, hence these technologies are designed to its requirements. Thereby the main drivers for the application of fiber reinforced plastics are the superior mechanical properties with a very low density. To fulfill the standards of the aerospace industry only polymers with high melting temperatures are applied such as on Polyaryletherketone (PAEK) based polymers.

Furthermore the lot size in aerospace is low in particularly compared to automotive industry and the process and cycle times for individual parts are much higher. In addition entire components in aerospace are manufactured by fiber reinforced plastics which results in high amounts of these materials per part.

Automotive industry on the contrary has modified requirements to its materials and processes. Regarding the mechanical properties of the materials lower graded polymers and fibers are sufficient. In addition the lot size is much higher and the cycle time lower. Furthermore the amount of materials with very high mechanical properties is much lower and is mostly applied only locally. Figure 1 illustrates the different requirements of aerospace and automotive industry regarding the polymers and its processes.

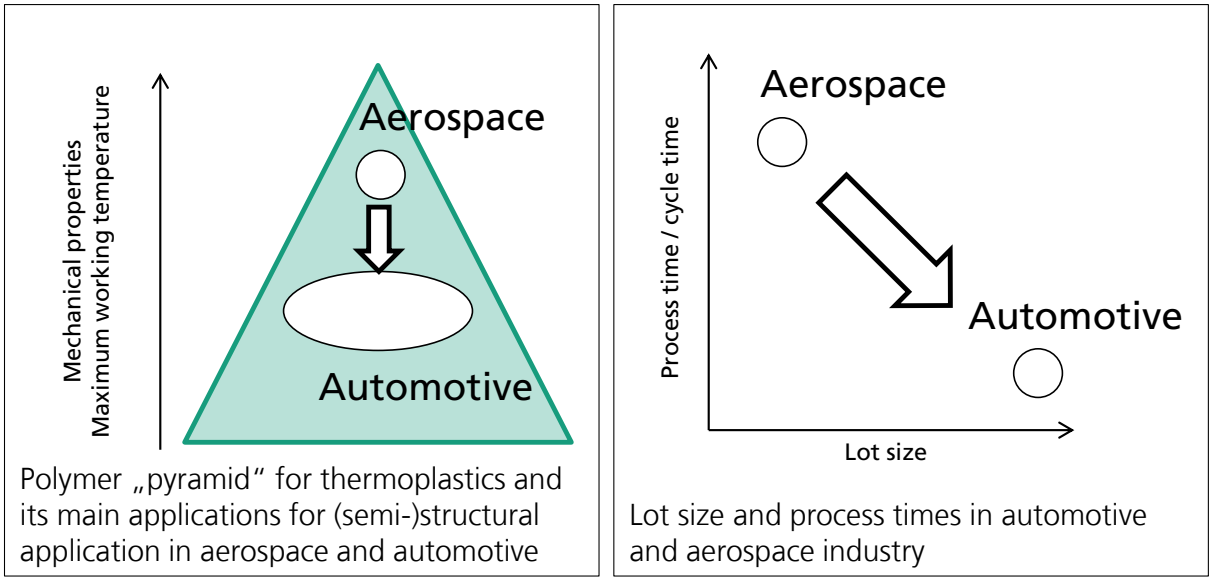

Figure 1 Polymers used for aerospace and automotive industry (left); lot size and process times in automotive and aerospace industry (right)

Therefore the existing technologies need to be adapted or new technologies have to be developed. Within this paper two process chains are shown which fulfill the requirements for a high volume production.

HIGH VOLUME PROCESS CHAINS FOR UNIDIRECTION FIBRE REINFORCED THERMOPLASTICS

On the market available production systems to process thermoplastic tapes are generally build up according to process chain I in Figure 2. Thereby the tape is stacked to its desired part and in specific fiber orientation. The layup rate of the stacking or placing of tapes is generally low and causes high process costs per volume. To achieve an easy to handle part the tapes are tacked to each other. In a subsequent process the buildup laminate is consolidated in a press or autoclave and afterwards formed to its final shape. Thereby the process time of the tape stacking with subsequent consolidation is time consuming.

Process chain II on contrary combines the placement of the tape with the consolidation press within one step and minimizes process time and also handling operations between the processes.

Process chain III however builds up the tape on existing parts as local reinforcement and only accounts for a small amount of the part weight and volume. The tape is applied only in mean load directions to carry the main forces.

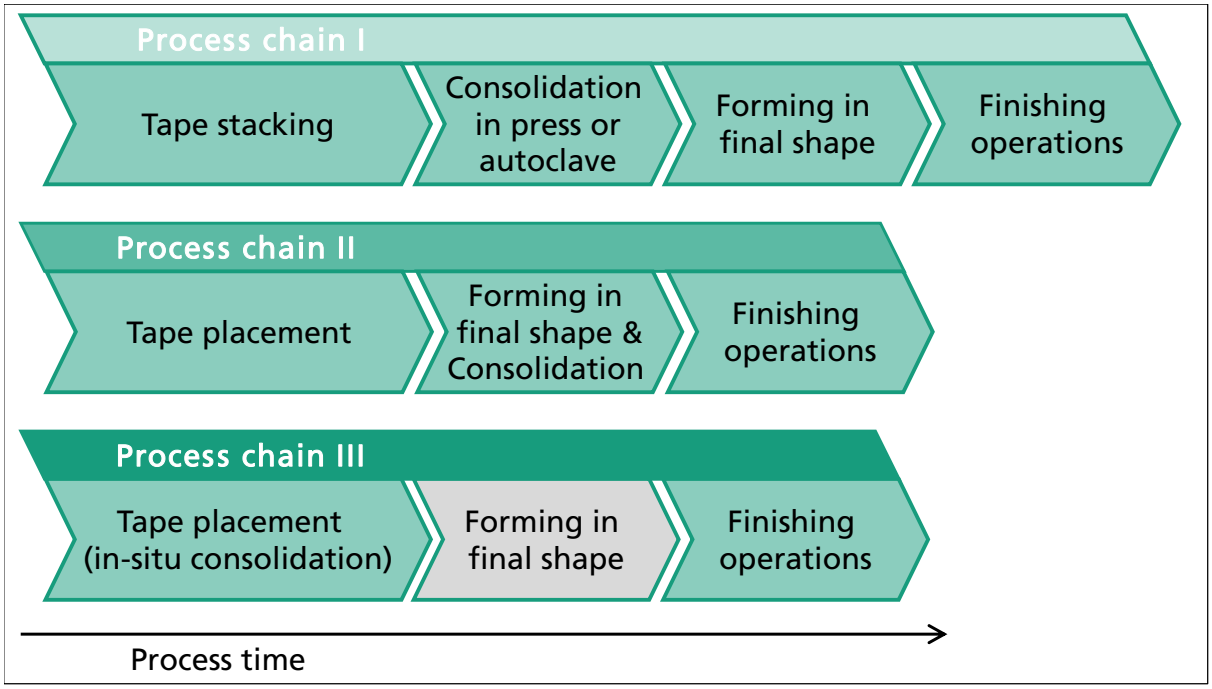

Figure 2 process chains for the processing of unidirectional fiber reinforced thermoplastic tapes

Within this paper process chains II and III are described in more detail.

Process chain II

Process chain III (application of tapes as local reinforcements)

The application of tapes as local reinforcements utilizes nearly the full potential of the fibers as the fibers are arranged along the direction of force. Furthermore the local utilization of the tapes requires less material hence less material costs for the tape. In addition process time is minimized due to lesser material.

However the application of tapes as local reinforcement requires a specific part design. That implies the knowledge of a fiber conform part design and the integration in existing process chains.

To evaluate the process chain two different substrate materials are reinforced with tape. The material combinations and the process parameters for the tape placement are shown in table 1.

Table 1 Combinations of local reinforcement and basic structure

Combination	**#1**	**#2**
Substrate	Sandwich panel with PP core and glass fiber reinforced top layers	PA12 basic structure
Reinforcement	Glass fiber / PP tape (width:12 mm, thickness: 0.25 mm) Number of tapes: 1	Carbon fiber / PA12 tape (width: 12 mm, thickness: 0.15 mm) Number of tapes: 1, 2, or 3
Main process parameters for tape placement	Layup speed: 200 and 300 mm/s Laser power: 1500 W Consolidation force: 150 N	Layup speed: 300 mm/s Processing temperature: 220°C Consolidation force: 150 N

Thereby the PP glass fiber tape is processed at a constant laser power of 1500 W to realize a processing temperature of 200°C. The PA12 carbon fiber tape however is processed temperature controlled to realize 220°C in the nip-point area. The local reinforcements are applied with the laser-assisted tape placement unit developed at Fraunhofer IPT as shown in figure 3.

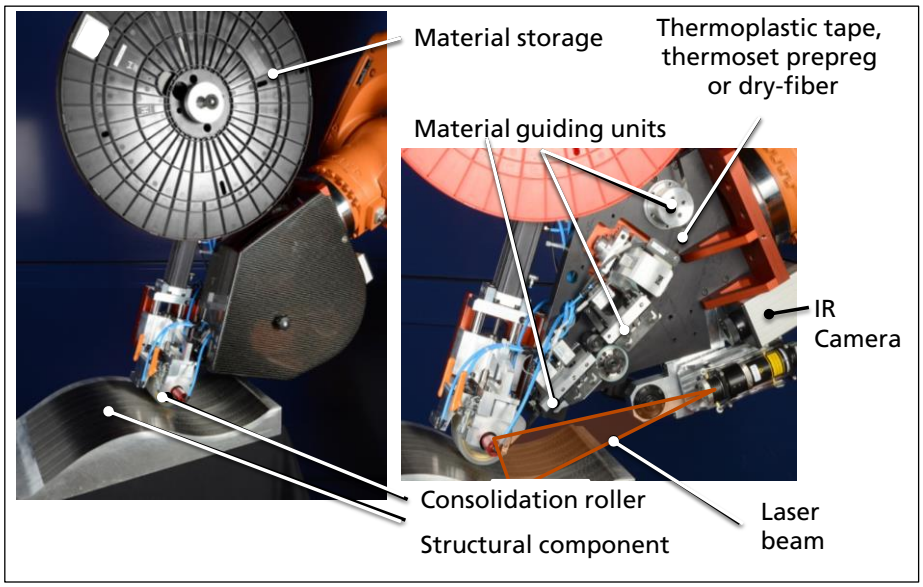

Figure 3 Fraunhofer IPT tape placement unit

The tape consolidation quality of combination #1 is subsequently with the mandrel peel test setup. Thereby the tape is peeled off the substrate at a constant speed of 15 mm/s for a length of 150 mm as it is seen in figure 4.

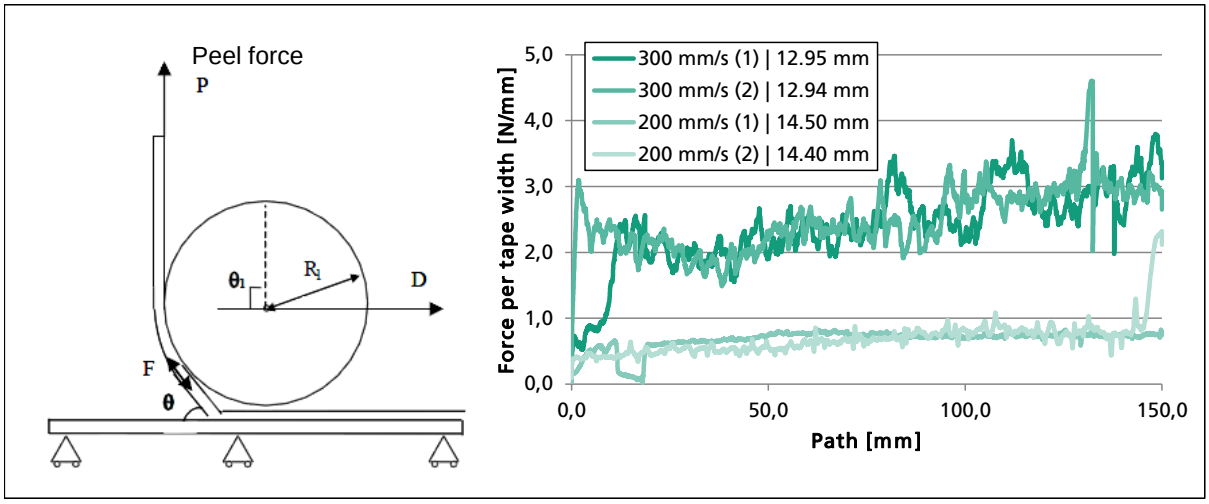

Figure 4 Mandrel peel test of composition #1 (Force is displayed in N/mm tape width)

The tape width after tape placement increased over 20 % due to the consolidation force and induced heat. However the bonding of the slower placed tape to the substrate is per mm tape width lower. A degradation of the matrix is probably. With the speed of 200 mm/s a demonstrator sample is set up and the bonding is further investigated with microscopic images as seen in figure 5.

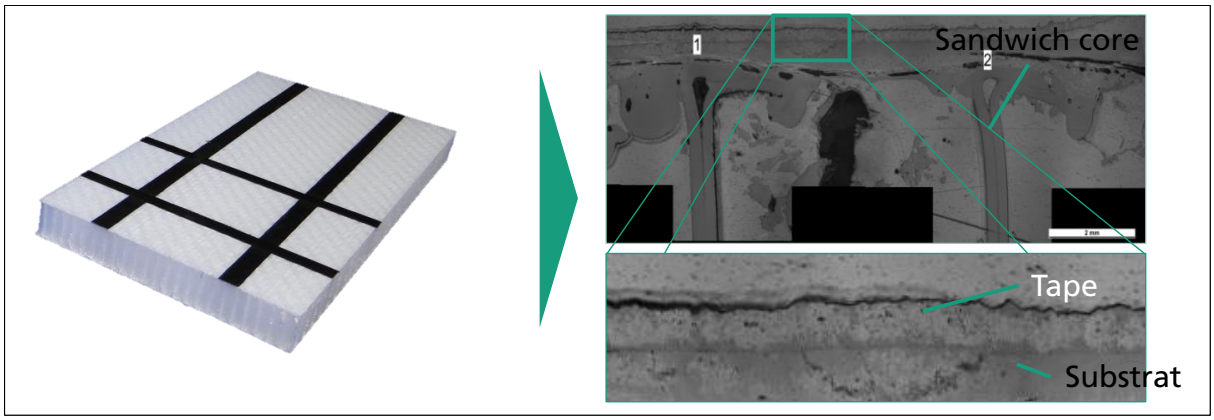

Figure 5 Demonstrator sample of composition #1 (left) microscopic images of bonding area (right)

The microscopic images clearly show the well welded area between tape and substrate with very few voids. Due to melting up of the top layer the honeycomb core is locally deformed and might decrease mechanical properties of the core.

For combination #2 a basic support structure is reinforced with 1-3 tapes and tested within a 3 point bending test subsequently to demonstrate the effect of the reinforcement.

The 3 point bending test demonstrated the impact of already one tape as reinforcement as shown in Figure 6.

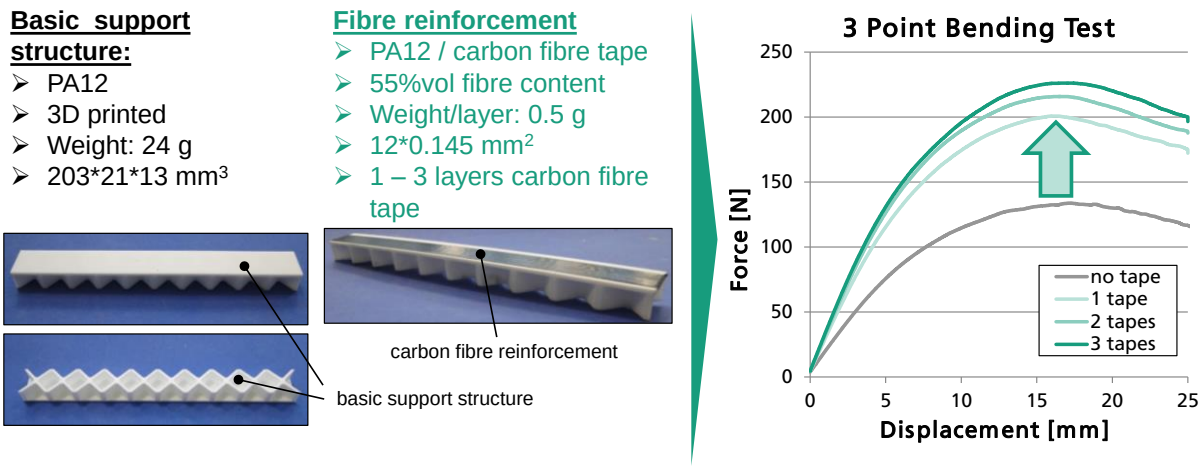

Figure 6 Demonstrator sample of composition #2 (left); 3 point bending test results (right)

Figure 6 in addition demonstrates the low amount of additional material due to very low density and thickness of the tape.

CONCLUSION

Within this paper two process chains are demonstrated which are capable to enable the application of tapes within high volume production environments. As long as already few layers of tape are sufficient process chain #3 demonstrates a potential alternative to existing reinforcements. In particular it is beneficial concerning lightweight applications due to the ratio of weight to stiffness and strength. However it is necessary to consider the material early in the design phase.

REFERENCE

[1] …